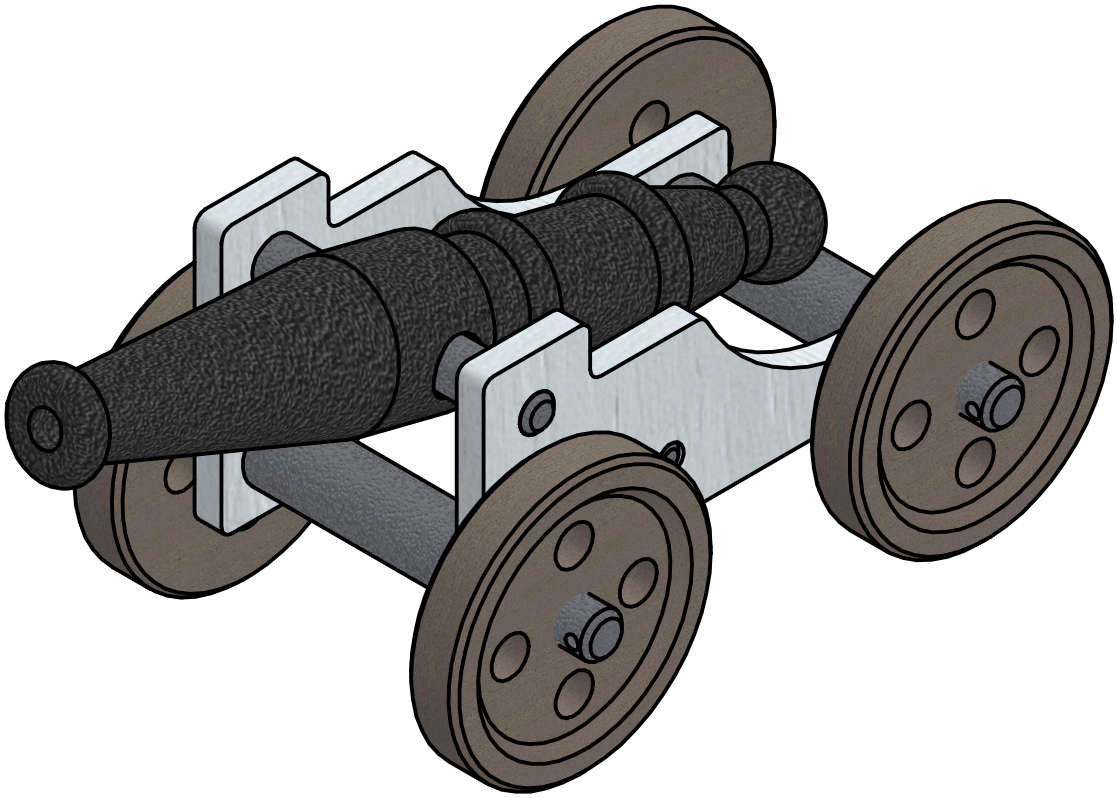

ISO (1 : 1)

PARTS LIST				
ITEM	QTY	PART NUMBER	MATERIAL	APPEARANCE
1	2	Barrel Support	Wood (Walnut)	Wood - Painted White
2	2	Axel	Iron, Cast	Iron - Cast
3	1	Barrel Resting Pin	Iron, Cast	Iron - Cast
4	1	Barrel	Bronze, Cast	Black Cast
5	1	Cannon Pin	Iron, Cast	Iron - Cast
6	4	Wheel	Wood (Walnut)	Walnut

	Date	Name
Drawn	23-10-2023	LEGION SMIT
Checked		
Standard		

State	Changes	Date	Name

Matriculation No. | Serial No.

Name

CA-01

Cannon Assembly

1

A4

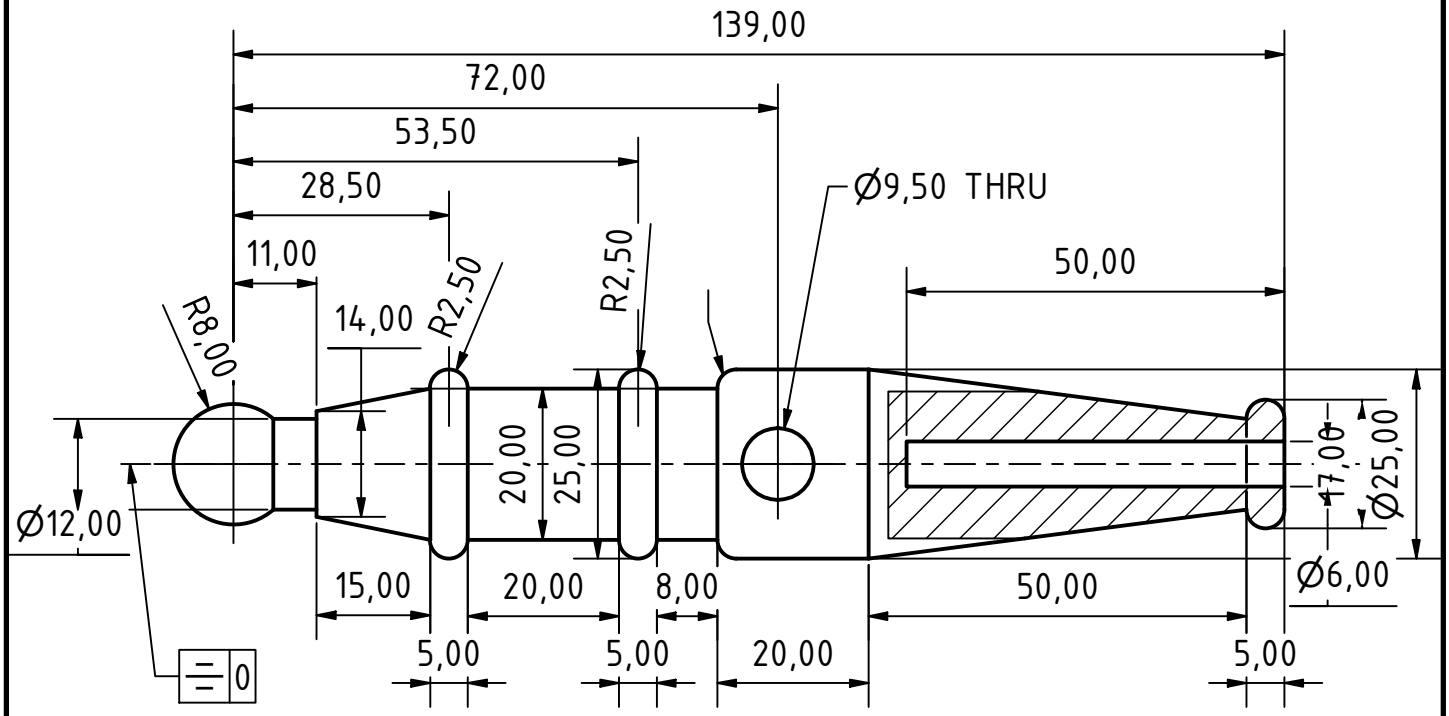

SIDE VIEW (1 : 1)

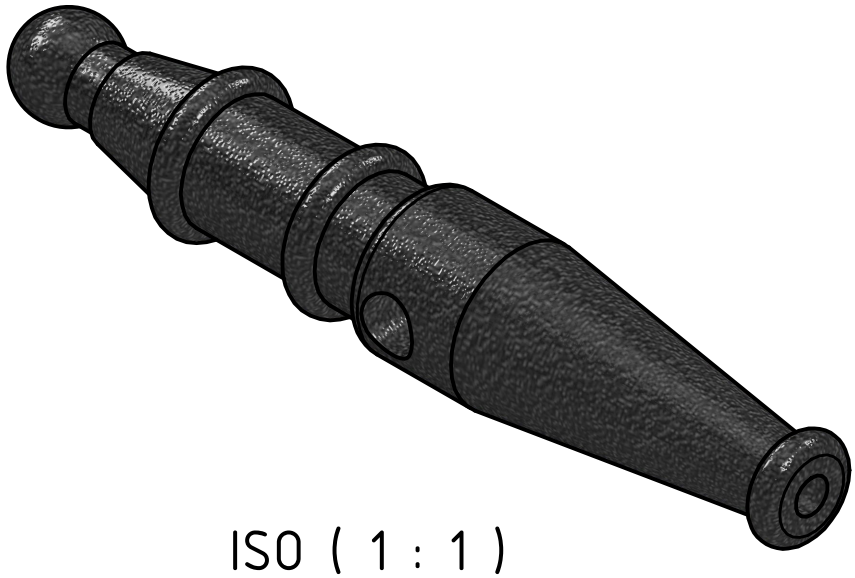

ISO (1 : 1)

						Matriculation No.	Serial No.
						Name	
					Date	Name	
				Drawn	23-10-2023	LEGION SMIT	CA-02
				Checked			
				Standard			
						Cannon Assembly	2
							A4
State	Changes	Date	Name				

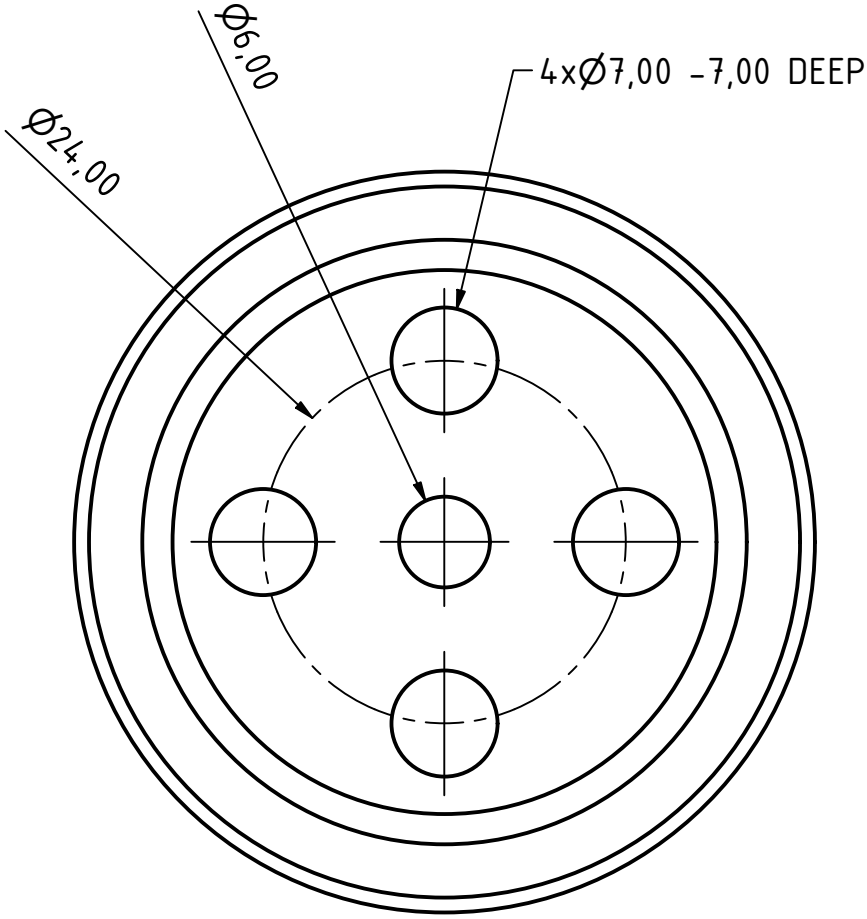

FRONT VIEW (2:1)

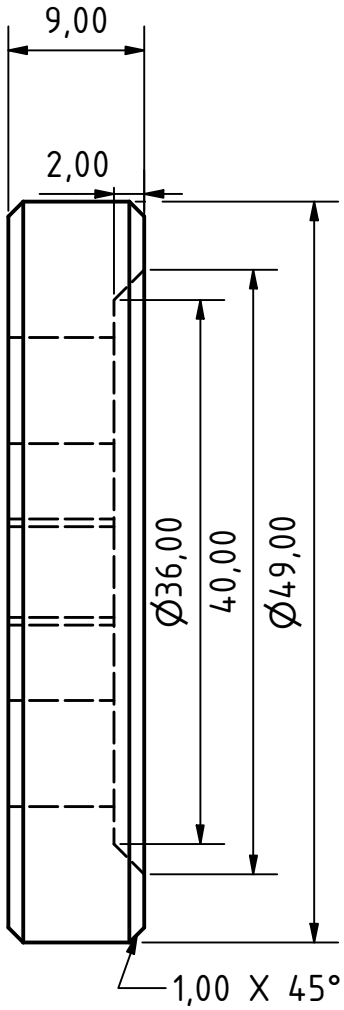

SIDE VIEW (2:1)

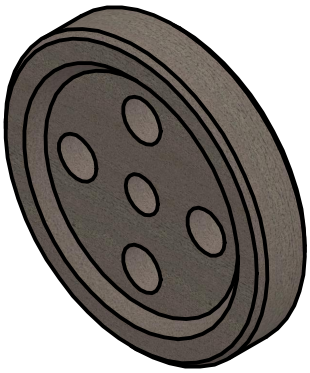

ISO (1:1)

						Matriculation No. / Serial No.
						Name
					Date	Name
				Drawn	23-10-2023	LEGION SMIT
				Checked		
				Standard		
						CA-03
						Cannon Assembly
						3
						A4
State	Changes	Date	Name			